PROBLEM SET 5

Boolean Algebra and circuit implementaiton

1. Using Boolean algebra, simplify the following expressions:
   (a) $(\bar{A} + B)(A + C)$
   (b) $A\bar{B} + A\bar{B}C + A\bar{B}CD + A\bar{B}CDE$
   (c) $BC + \overline{BCD} + B$
   (d) $(B + \bar{B})(BC + BC\bar{D})$
   (e) $BC + (\bar{B} + \bar{C})D + BC$

Solution:

(a) $(A+\overline{B})(A+C) = AA + AC + A\overline{B} + \overline{B}C = A + AC + A\overline{B} + \overline{B}C$

$= A(1 + C + \overline{B}) + \overline{B}C = A(1) + \overline{B}C = \boldsymbol{A + \overline{B}C}$

(b) $\overline{A}B + \overline{A}B\overline{C} + \overline{A}BCD + \overline{A}B\overline{C}\,\overline{D}E = \overline{A}B(1 + \overline{C} + CD + \overline{C}\,\overline{D}E) = \overline{A}B(1)$

$= \boldsymbol{\overline{A}B}$

(c) $AB + \overline{AB}C + A = AB + (\overline{A} + \overline{B})C + A = AB + \overline{A}C + \overline{B}C + A$

$A(B+1) + \overline{A}C + \overline{B}C = A + \overline{A}C + \overline{B}C = A + C + \overline{B}C = A + C(1 + \overline{B})$

$= \boldsymbol{A + C}$

(d) $(A + \overline{A})(AB + AB\overline{C}) = AAB + AAB\overline{C} + \overline{A}AB + \overline{A}AB\overline{C}$

$= AB + AB\overline{C} + 0 + 0 = AB(1 + \overline{C}) = \boldsymbol{AB}$

(e) $AB + (\overline{A} + \overline{B})C + AB = AB + \overline{A}C + \overline{B}C + AB = AB + (\overline{A} + \overline{B})C$

$= AB + \overline{AB}C = \boldsymbol{AB + C}$

2. Using Boolean algebra, simplify the following expressions:
   (a) CE + C(E + F) + E'(E + G)
   (b) B' C'D + (B + C + D)' + B' C' D'E
   (c) (C + CD)(C + C'D)(C + E)
   (d) BCDE + BC(DE)' + (BC)'DE
   (e) BCD[BC + D'(CD + BD)]

Solution:

(a) $BD + B(D + E) + \overline{D}(D + F) = BD + BD + BE + \overline{D}D + \overline{D}F$

$= BD + BE + 0 + \overline{D}F = \boldsymbol{BD + BE + \overline{D}F}$

(b) $\overline{A}\,\overline{B}C + (\overline{A + B + \overline{C}}) + \overline{A}\,\overline{B}\,\overline{C}D = \overline{A}\,\overline{B}C + \overline{A}\,\overline{B}C + \overline{A}\,\overline{B}\,\overline{C}D = \overline{A}\,\overline{B}C + \overline{A}\,\overline{B}\,\overline{C}D$

$= \overline{A}\,\overline{B}(C + \overline{C}D) = \overline{A}\,\overline{B}(C + D) = \boldsymbol{\overline{A}\,\overline{B}C + \overline{A}\,\overline{B}D}$

(c) $(B + BC)(B + \overline{B}C)(B + D) = B(1 + C)(B + C)(B + D)$

$= B(B + C)(B + D) = (BB + BC)(B + D) = (B + BC)(B + D)$

$= B(1 + C)(B + D) = B(B + D) = BB + BD = B + BD = B(1 + D) = \boldsymbol{B}$

(d) $ABCD + AB(\overline{CD}) + (\overline{AB})CD = ABCD + AB(\overline{C} + \overline{D}) + (\overline{A} + \overline{B})CD$

$= ABCD + AB\overline{C} + AB\overline{D} + \overline{A}CD + \overline{B}CD$

$= CD(AB + \overline{A} + \overline{B}) + AB\overline{C} + AB\overline{D} = CD(B + \overline{A} + \overline{B}) + AB\overline{C} + AB\overline{D}$

$= CD(1 + \overline{A}) + AB\overline{C} + AB\overline{D} = CD + AB\overline{C} + AB\overline{D} = CD + AB(\overline{CD}) = \boldsymbol{CD + AB}$

(e) $ABC[AB + \overline{C}(BC + AC)] = ABABC + ABC\overline{C}(BC + AC)$

$= ABC + 0(BC + AC) = \boldsymbol{ABC}$

3. Use NAND gates, NOR gates, or combinations of both to implement the following logic expressions as stated:
   (a) X = A'B + CD + (A + B)'(ACD + (BE)')
   (b) X = ABC'D' + DE'F + (AF)'
   (c) X = A'[B + C'(D + E)]

   Solution:

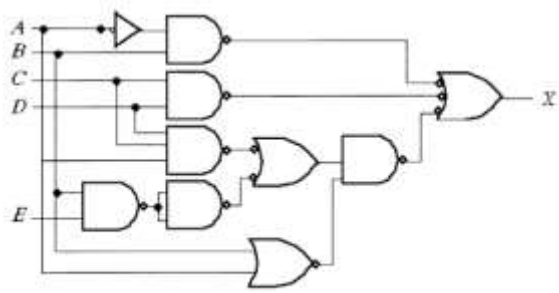

(a) $X = \overline{AB} + CD + (\overline{A + B})(ACD + \overline{BE})$

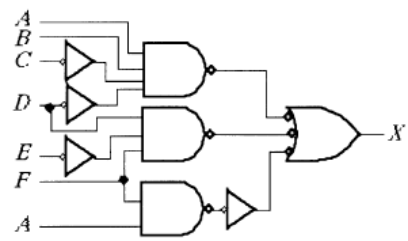

(b) $X = AB\overline{C}\overline{D} + D\overline{E}F + \overline{AF}$

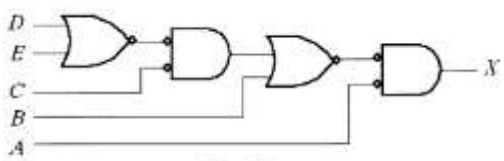

(c) $X = \overline{A}[B + \overline{C}(D + E)]$

4. Figure below is a logic circuit under test. Figure next to the circuit shows the waveforms as observed on a logic analyzer. The output waveform is incorrect for the inputs that are applied to the circuit. Assuming that one gate in the circuit has failed, with its output either an apparent constant HIGH or a constant LOW, determine the faulty gate and the type of failure.

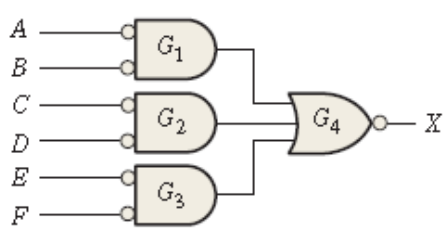

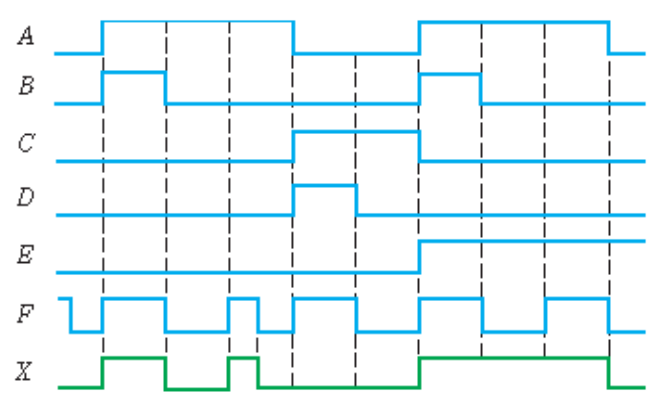

TP = $\overline{\overline{AB} + \overline{CD}}$

The output of the $\overline{C}\,\overline{D}$ gate is *stuck LOW*.

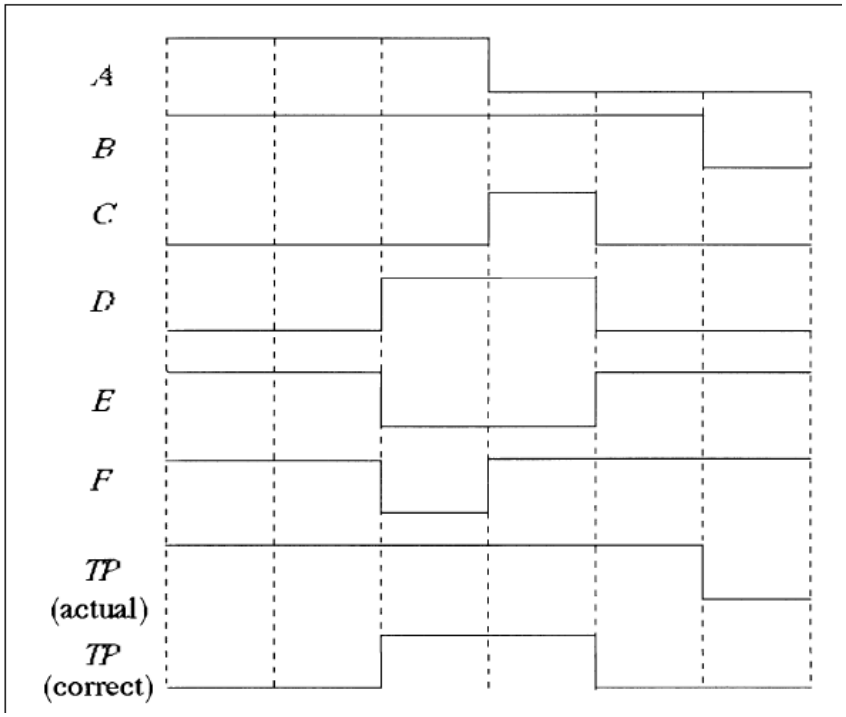

5. Design a logic circuit to produce a HIGH output only if the input, represented by a 4-bit binary number, is greater than twelve or less than three. First develop the truth table and then draw the logic diagram.

Solution:

A_3	A_2	A_1	A_0	X
0	0	0	0	1
0	0	0	1	1
0	0	1	0	1
0	0	1	1	0
0	1	0	0	0
0	1	0	1	0
0	1	1	0	0
0	1	1	1	0
1	0	0	0	0
1	0	0	1	0
1	0	1	0	0
1	0	1	1	0
1	1	0	0	0
1	1	0	1	1
1	1	1	0	1
1	1	1	1	1

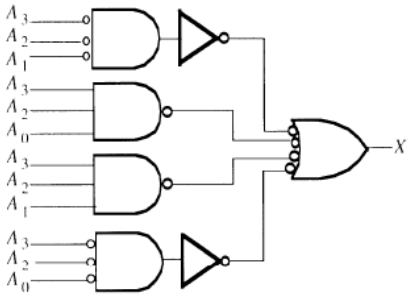

6. Develop the logic circuit necessary to meet the following requirements:

A battery-powered lamp in a room is to be operated from two switches, one at the back door and one at the front door. The lamp is to be on if the front switch is on and the back switch is off, or if the front switch is off and the back switch is on. The lamp is to be off if both switches are off or if both switches are on. Let a HIGH output represent the on condition and a LOW output represent the off condition.

Let
X = Lamp on
A = Front door switch on
$\overline{A}$ = Front door switch off
B = Back door switch on
$\overline{B}$ = Back door switch off
$X = A\overline{B} + \overline{A}B$. This is an XOR operation.

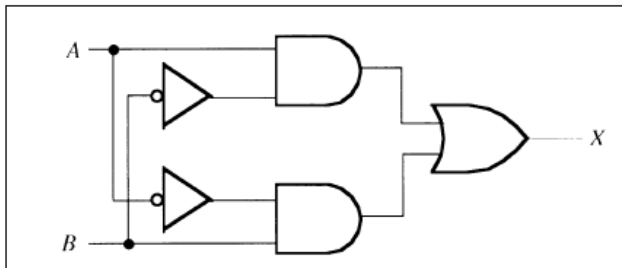

7. Develop the NAND logic for a hexadecimal keypad encoder that will convert each key closure to binary.
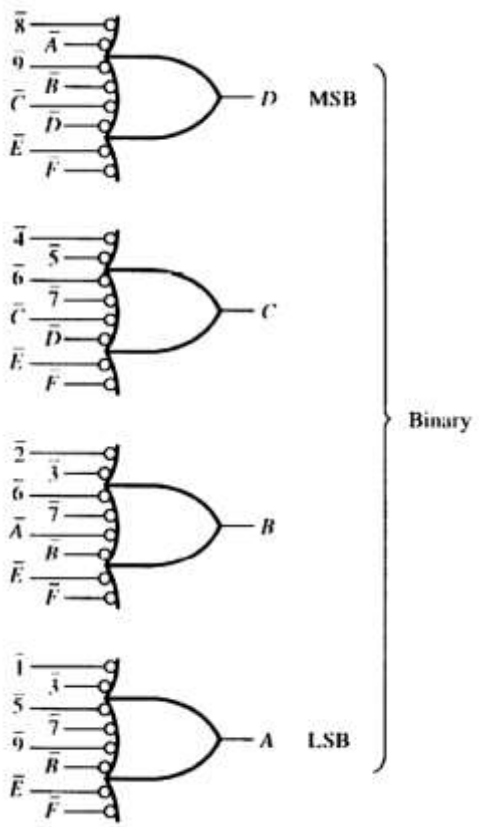
Solution: